Installation Instructions

ELEKTROMAT

SE 9.24 WS-25,40

Model: 10002237 10012

-en-

Status: 26.03.2021

GfA ELEKTROMATEN GmbH & Co. KG
Wiesenstraße 81
D-40549 Düsseldorf
www.gfa-elektromaten.de
info@gfa-elektromaten.de

Table of contents

1 General safety information 4

Safe operation 4

2 Technical Data 6

3 Mechanical installation 7

4 Electrical installation 11

5 Limit switch adjustment 12

6 Motor connection 13

7 Limit switch connection 13

8 Emergency manual operation (rapid hand chain operator) 14

9 Completing commissioning / inspection 16

10 Declaration of incorporation / Declaration of conformity 17

Symbols

Warning - Potential injury or danger to life!

Warning - Danger to life from electric current!

Note - Important information!

► **Requirement -** Required action!

Schematic representations are based on product examples. Deviations from delivered products are possible.

1 General safety information

Specified use

The drive unit is only intended for vertically moving sectional doors with full counter-balancing.

The drive unit must be protected against moisture and aggressive environmental conditions (such as corrosive substances). The drive units are only suitable for indoor use. Appropriate protective measures must be taken for outdoor installation. The drive unit is not intended for hazardous areas. The values specified in the technical data of the drive unit must not be exceeded. The safe operation can only be ensured if used as specified.

Target audience of these installation instructions

These installation instructions are geared towards qualified persons trained in the handling of door systems. Expert knowledge, relevant skills and practical experience are what set apart qualified persons. They are capable of safely carrying out the tasks involving installation, maintenance and modernisation according to the instructions.

Safe operation

The safe operation of the product can only be ensured if it is used as specified. Follow the installation instructions. Observe all specifications, especially warnings, when installing the product in the overall system. GfA is not liable for damage resulting from non-observance of the installation instructions. The resulting overall system must be reassessed for its safety in accordance with applicable standards and directives (e.g. CE marking). These installation instructions refer only to a part of the overall system and are not sufficient as the sole instructions for the overall system. The installer of the system must prepare the instructions for the overall system.

We recommend entering the danger area of the system only when the drive unit is at a standstill.

Warning - Failure to follow these installation instructions may result in severe injury or death.

- Please read these instructions before using the product.
- Keep these instructions handy.
- Include these instructions when passing on the product to third parties.

Warning - Danger from improper use of the product!

- Do not let children operate the product unsupervised or use as a toy.

Warning - Danger to life from incorrect installation!

Work carried out improperly may result in death or severe injury from electrical current or falling parts.

- Allow only competent people to carry out the work.
- Disconnect all cables from the power supply.
- Observe valid regulations and standards.
- Use suitable tools.

2 Technical Data

Type	SG 50	
Output torque	90	Nm
Output speed	24	rpm
Output shaft / hollow shaft	25,40	mm
Maximum holding torque	450	Nm
Maximum door weight	4000	N
Supply voltage	1N~ 230	V
Operating current	3,90	A
Operating frequency	50	Hz
Power factor cos φ	0,99	
Maximum movement per hour	16	h^{-1}
Class of protection	IP 65	
Limit switch range (maximum revolutions of output shaft / hollow shaft)	20	
Temperature range	-10 / +40 (+60)	°C

1) When using a temperature range of +40°...+60°C use half of maximum movements per hour.

3 Mechanical installation

Prerequisites

The permissible loads on walls, fastenings, mountings and transmission elements must not be exceeded, even for maximum holding torques or locking torques (▸ refer to technical data).

Connection elements:

▸ Self-locking connection elements with a minimum strength of 800 N/mm² (8.8) must be used.	▸ Utilize the hole diameter to the full.	▸ Use adequately dimensioned washers for elongated holes.
BAGAB00001_Z002 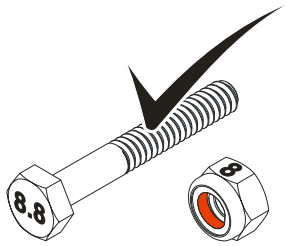	BAGAB00002_Z002 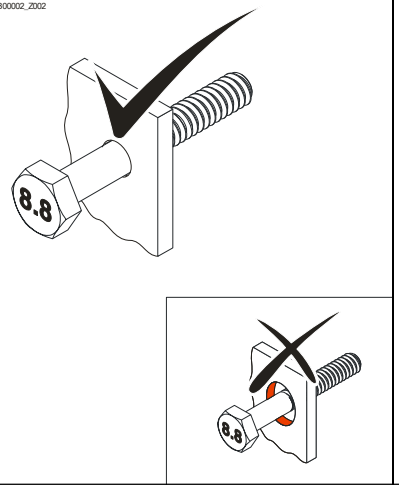	BAGAB00003_Z002 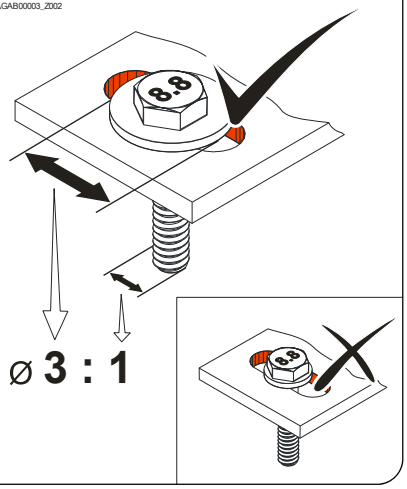

Permissible mounting positions

BAGAC01002_Z003

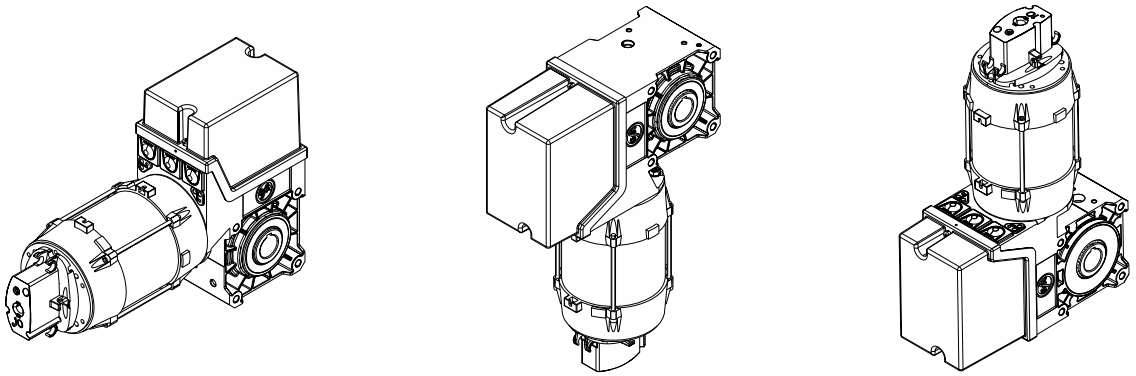

Mounting

Eight threads are provided for mounting.

- Use at least 2 of these (①).

Keys are used to connect to the door shaft.

- Use a key that is at least as long as the hollow shaft (②).

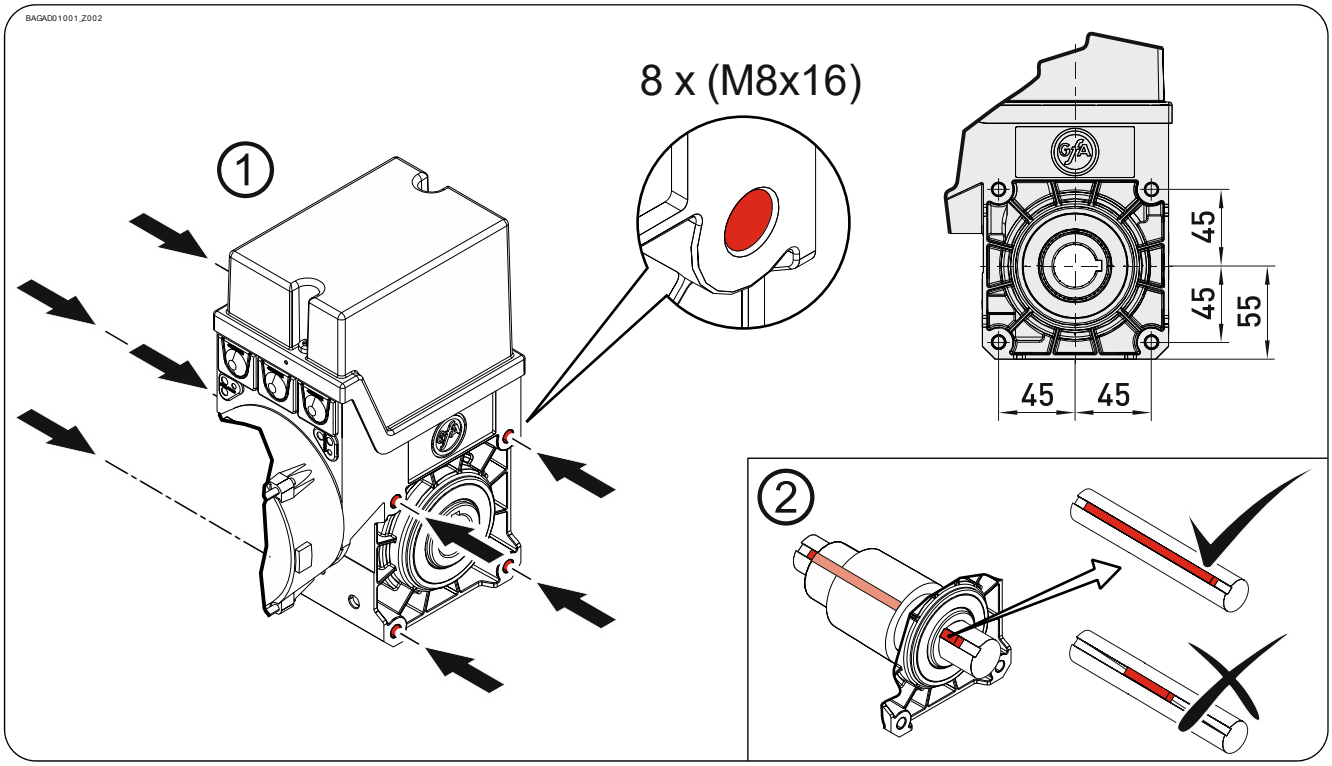

Installation

The descriptions below apply to general door specifications. The specifications of the door manufacturer must also be observed during installation.

Warning - Potential injury or danger to life!

- During installation, be sure to use a lifting device that has a sufficient load-carrying capacity.

▸ Thoroughly grease the door shaft.

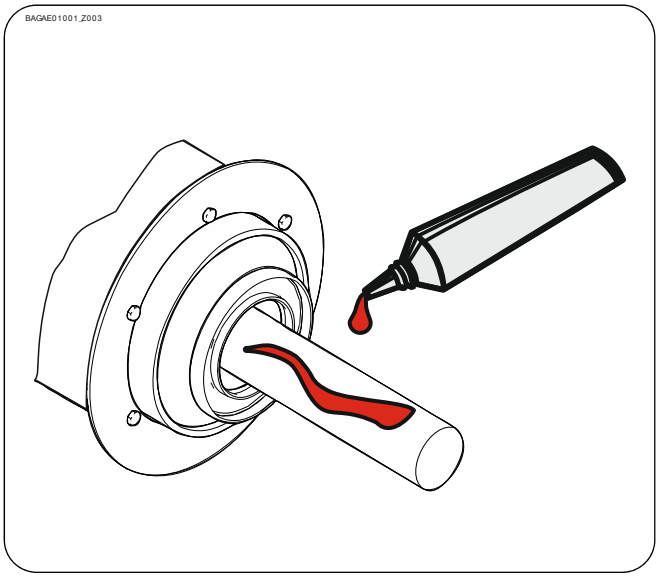

▸ Mount the keys. Observe possible variants Ⓐ or Ⓑ.

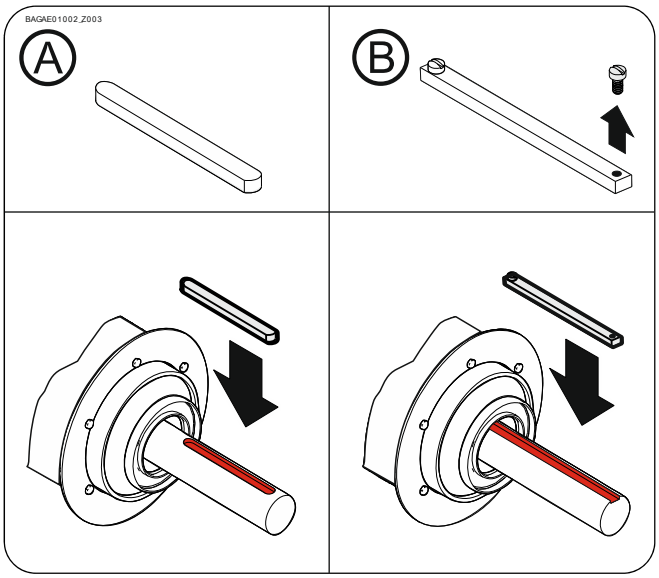

- Attach the drive unit.

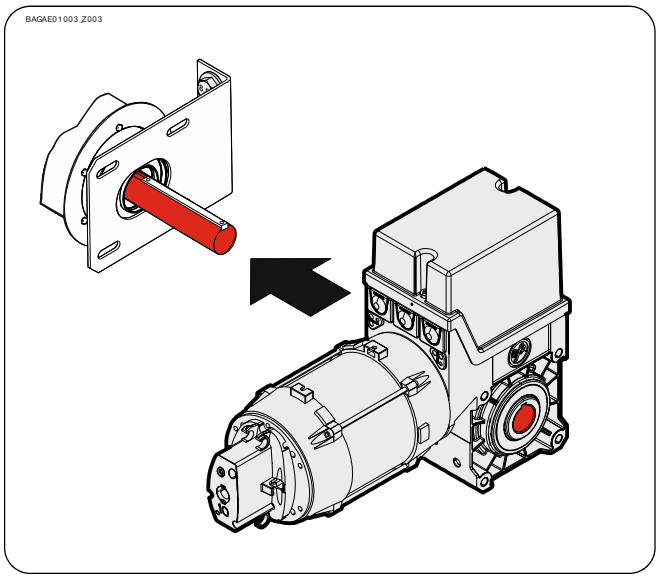

- Tighten all connection elements (M8) to 25 Nm. Install all other connection elements according to the specifications of the door manufacturer.

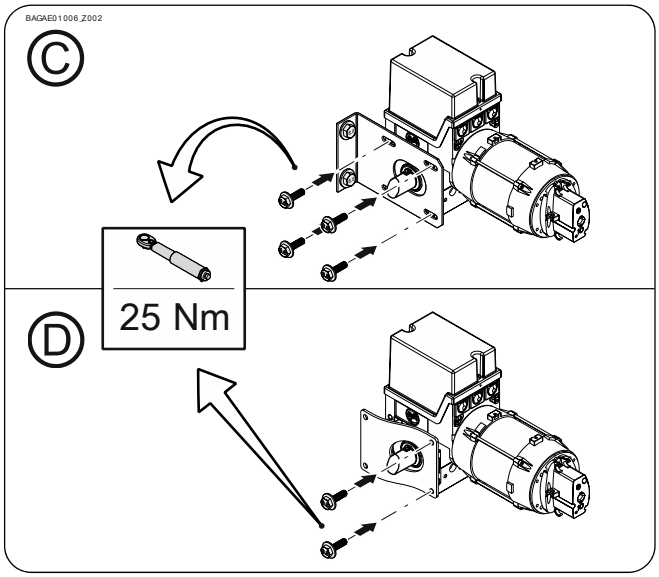

- Secure the keys (version Ⓑ only).

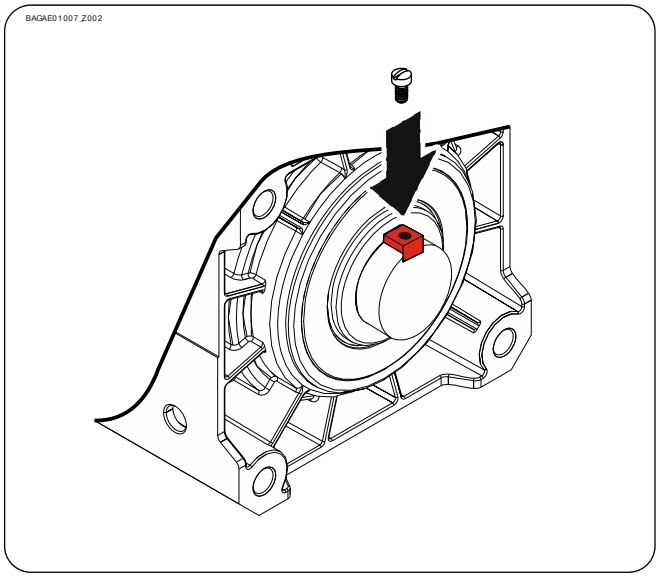

4 Electrical installation

Warning - Danger to life from electric current!

- Switch the mains OFF and check that the cables are de-energised
- Observe the applicable regulations and standards
- Make a proper electrical connection
- Use suitable tools

Performing electrical installation

Remove the cover.	Insert the motor plug.	Insert the limit switch plug.
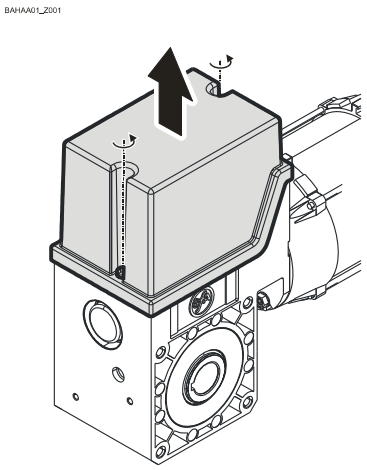	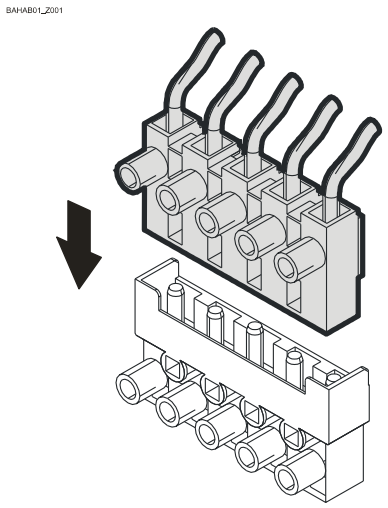	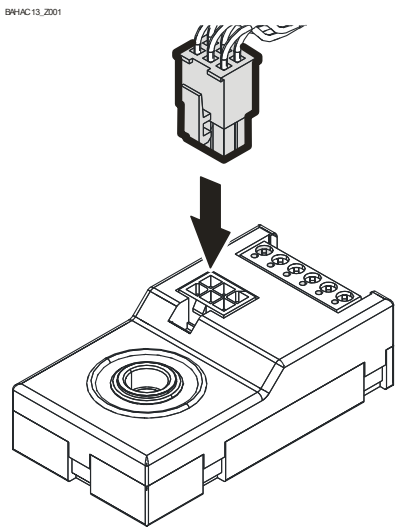

Completing the electrical installation

Mount the cable entries and/or cable glands.

5 Limit switch adjustment

The adjustment of the final limit positions OPEN and CLOSE is described in the instructions for the door control panel.

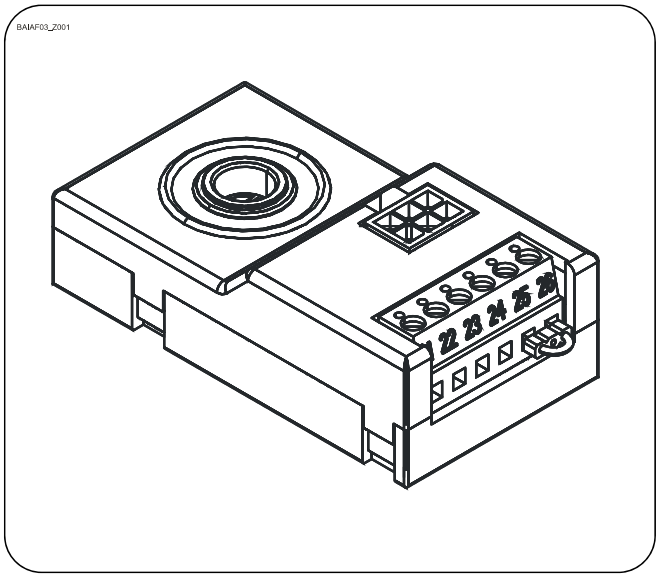

6 Motor connection

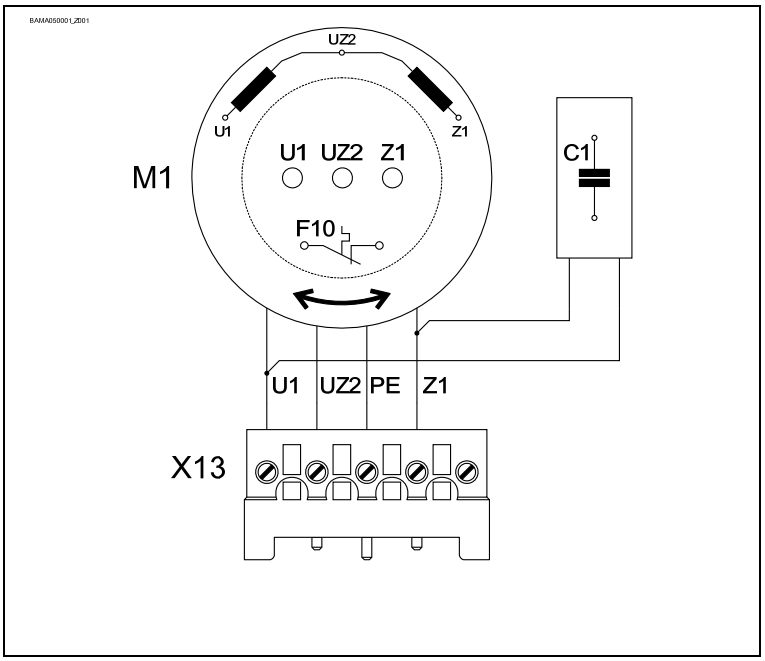

C1	Operating capacitor
M1	Motor
X13	Motor plug

7 Limit switch connection

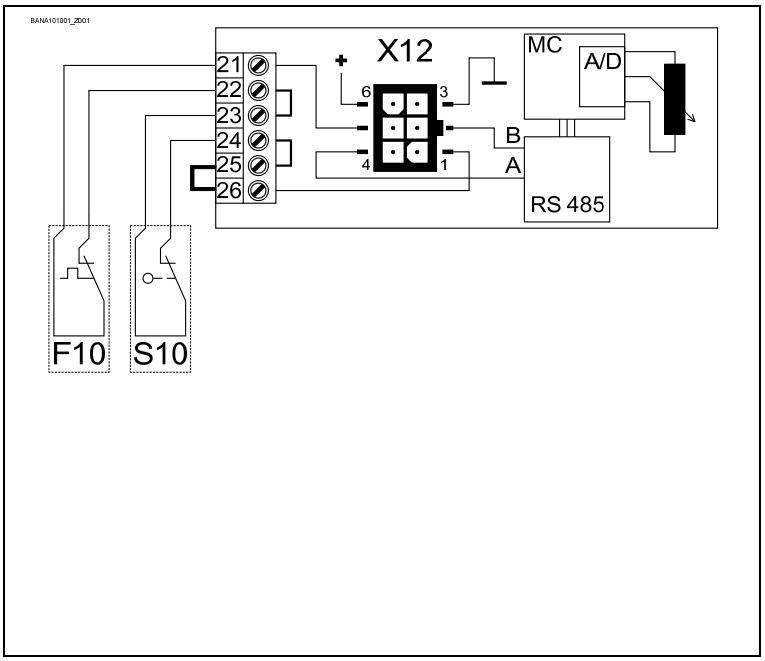

F10	Thermal contact
S10	Emergency manual operation
X12	DES connection
1	Safety circuit
2	Channel B (RS485)
3	Ground
4	Channel A (RS485)
5	Safety circuit
6	Supply voltage

8 Emergency manual operation (rapid hand chain operator)

Emergency manual operation is designed for opening or closing the door without power supply. Its activation interrupts the control voltage. Electrical operation is no longer possible.

Warning – Injuries due to incorrect operation!

- Switch off voltage.
- Adopt a secure position.
- For drive units with brake, the emergency manual operation must be carried out against the closed brake.

Warning - Danger of the door dropping!

If you need to apply more than the permissible force of 390N (according to DIN EN 12604/DIN EN 12453) to move the door by emergency manual operation, this indicates a stalling on the drive unit or door. Releasing the stalling may cause the door to drop.

- Adopt a secure position.
- For drive units with brake, the emergency manual operation must be carried out against the closed brake.

Caution – Damage to components!

- Do not move the door beyond the final limit positions.

Switch on by pulling the red handle. Open or close by pulling the chain. Switch off by pulling the green handle.

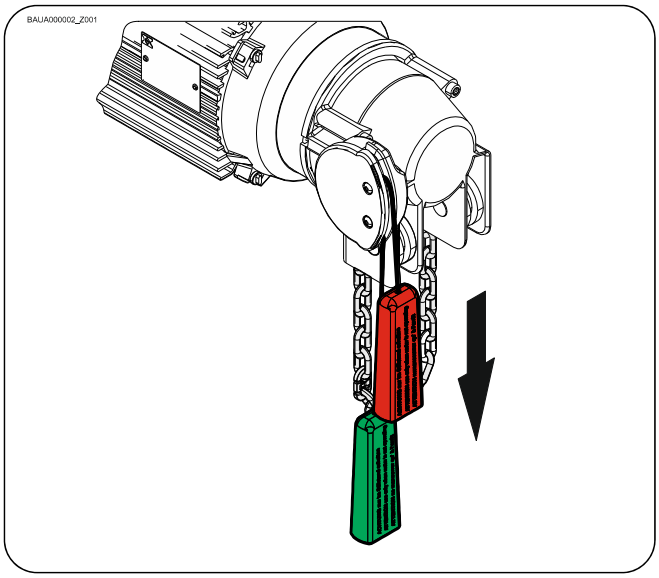

9 Completing commissioning / inspection

Check the following components and then install all covers.

Gearbox

Check the drive unit for loss of oil (a few drops can be neglected). Protect the output-shaft permanently against corrosion.

Mounting

Check that all connection elements (consoles, torque mounts, screws, locking rings, etc.) are secure and in proper condition.

Electrical wiring

Check the connection cables and cabling for damage or crushing. Check that the screw connections and plug connections are fitted properly with a good electric contact.

Emergency manual operation

Check the function with the power disconnected. Perform the check only between the final limit positions.

Limit switch

Check the final limit positions by opening and closing fully. The safety area must not be approached.

Drive unit

Note!

- Engage a qualified engineer to check the drive unit annually
- Apply shorter inspection intervals for doors that are operated frequently
- Observe the applicable regulations and standards

Declaration of incorporation

within the meaning of Machinery Directive 2006/42/EC
for partly completed machinery, Appendix II Part B

Declaration of conformity

within the meaning of EMC Directive 2014/30/EU
within the meaning of RoHS Directive 2011/65/EU

GfA ELEKTROMATEN GmbH & Co. KG
Wiesenstraße 81 · 40549 Düsseldorf
Germany

We,
GfA ELEKTROMATEN GmbH & Co. KG
declare under our sole responsibility that the following product complies with the above directives and is only intended for installation in a door system.

Drive unit

SE 9.24 WS-25,40

Part no.: 10002237 10012

We undertake to transmit in response to a reasoned request by the appropriate regulatory authorities the special documents on the partly completed machinery.

This product must only be put into operation when it has been determined that the complete machine/system in which it has been installed complies with the provisions of the above-mentioned directives.

Authorised representative to compile the technical documents is the undersigned.

Düsseldorf, 10.08.2018

Stephan Kleine
CEO

Signature

The following requirements from Appendix I of the Machinery Directive 2006/42/EC are met: 1.1.2, 1.1.3, 1.1.5, 1.2.2, 1.2.3, 1.2.6, 1.3.2, 1.3.3, 1.3.9, 1.5.1, 1.5.2, 1.5.4, 1.5.6, 1.5.7, 1.5.8, 1.5.9, 1.5.10, 1.5.11, 1.5.13, 1.6.1, 1.6.2, 1.6.4, 1.7.2, 1.7.3, 1.7.4.3.

Standards applied:

EN 12453:2001
Industrial, commercial and garage doors and gates - Safety in use of power operated doors - Requirements

EN 12604:2017
Industrial, commercial and garage doors and gates - Mechanical aspects - Requirements

EN 60335-1:2012
Household and similar electrical appliances - Safety - Part 1: General requirements

EN 61000-6-2:2005
Electromagnetic compatibility (EMC) Part 6-2 Generic standards – Immunity standard for industrial environments

EN 61000-6-3:2007
Electromagnetic compatibility (EMC) Part 6-3 Generic standards – Emission standard for residential, commercial and light-industrial environments